Cambridge IGCSE

Cambridge International Examinations
Cambridge International General Certificate of Secondary Education

CANDIDATE NAME	

CENTRE NUMBER						CANDIDATE NUMBER				

0950355531

MATHEMATICS **0580/21**

Paper 2 (Extended) **October/November 2015**

1 hour 30 minutes

Candidates answer on the Question Paper.

Additional Materials: Electronic calculator Geometrical instruments
Tracing paper (optional)

READ THESE INSTRUCTIONS FIRST

Write your Centre number, candidate number and name on all the work you hand in.
Write in dark blue or black pen.
You may use an HB pencil for any diagrams or graphs.
Do not use staples, paper clips, glue or correction fluid.
DO **NOT** WRITE IN ANY BARCODES.

Answer **all** questions.
If working is needed for any question it must be shown below that question.
Electronic calculators should be used.
If the degree of accuracy is not specified in the question, and if the answer is not exact, give the answer to three significant figures. Give answers in degrees to one decimal place.
For π, use either your calculator value or 3.142.

At the end of the examination, fasten all your work securely together.
The number of marks is given in brackets [ ] at the end of each question or part question.
The total of the marks for this paper is 70.

The syllabus is approved for use in England, Wales and Northern Ireland as a Cambridge International Level 1/Level 2 Certificate.

This document consists of **11** printed pages and **1** blank page.

DC (LEG/FD) 103725/2

CAMBRIDGE International Examinations

[Turn over

1 At midnight the temperature in Newtown was –8 °C.
At noon the next day the temperature in Newtown was 9 °C.

Work out the rise in temperature from midnight to noon.

Answer ..... °C [1]

2

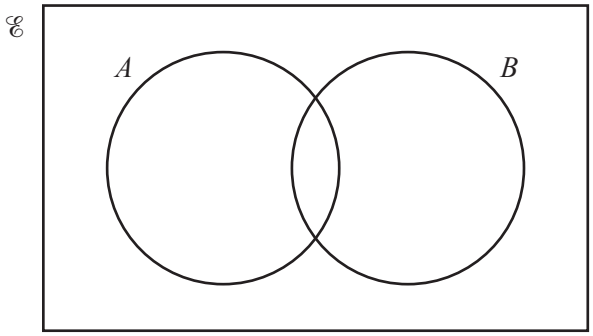

In the Venn diagram shade the region $A \cup B'$. [1]

3

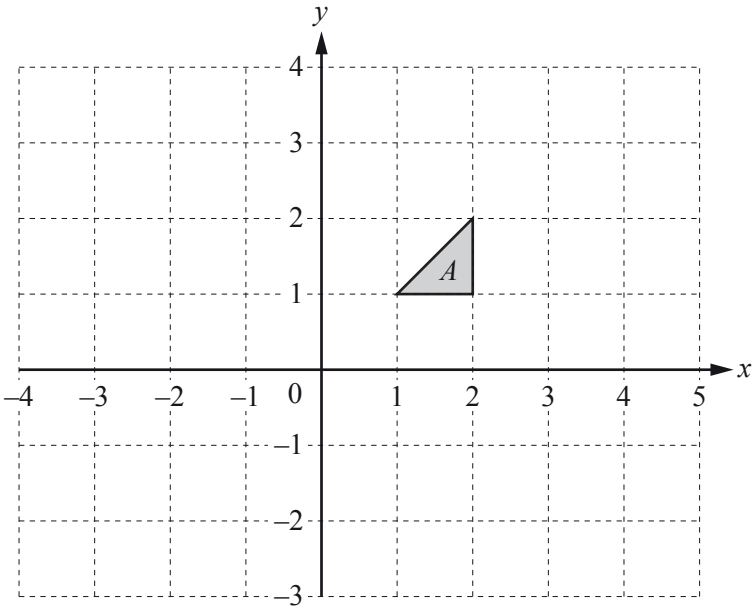

Draw the image of shape A after a translation by the vector $\begin{pmatrix} 2 \\ -3 \end{pmatrix}$. [2]

---

4 Pip and Ali share \$785 in the ratio Pip : Ali = 4 : 1.

Work out Pip's share.

Answer \$ ..... [2]

---

5 Jim scores the following marks in 8 tests.

7 8 8 y 6 9 10 5

His mean mark is 7.5 .

Calculate the value of y.

Answer y = ... [2]

---

6 By writing each number correct to 1 significant figure, estimate the value of $\dfrac{\sqrt{3.9} \times 29.3}{8.9 - 2.7}$.

Show all your working.

Answer ..... [2]

---

7 Work out the highest common factor (HCF) of 36 and 90.

Answer ..... [2]

8

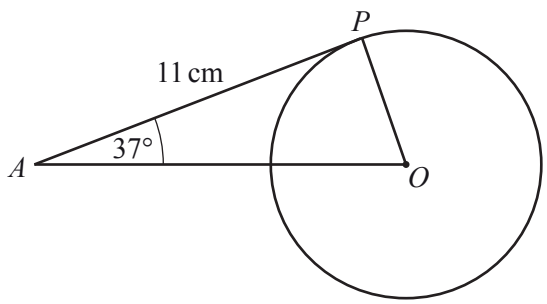

NOT TO SCALE

In the diagram, AP is a tangent to the circle at P.
O is the centre of the circle, angle $PAO = 37°$ and $AP = 11$ cm.

(a) Write down the size of angle OPA.

Answer(a) Angle OPA = ... [1]

(b) Work out the radius of the circle.

Answer(b) ..... cm [2]

---

9 Factorise completely.

(a) $ax + ay + 3cx + 3cy$

Answer(a) ..... [2]

(b) $3a^2 - 12b^2$

Answer(b) ..... [3]

---

10 Write the recurring decimal $0.1\dot{5}$ as a fraction.
[$0.1\dot{5}$ means 0.1555...]

Answer ..... [2]

11

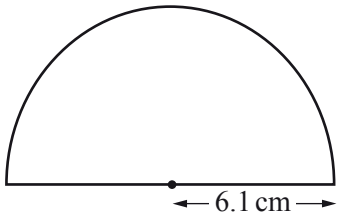

NOT TO SCALE

A protractor is a semi-circle of radius 6.1 cm.

Calculate the **perimeter** of the protractor.

Answer ..... cm [3]

---

12 V is directly proportional to the cube of $(r + 1)$.
When $r = 1$, $V = 24$.

Work out the value of V when $r = 2$.

Answer $V =$ ..... [3]

---

13 Make x the subject of the formula.

$$y = ax^2 + b$$

Answer $x =$ ..... [3]

---

14 A car travels at 56 km/h.

Find the time it takes to travel 300 metres.
Give your answer in seconds correct to the nearest second.

Answer ..... s [4]

---

15 Simplify. $\dfrac{x^2 - 16}{x^2 - 3x - 4}$

Answer ..... [4]

---

16 Hazel invests \$1800 for 7 years at a rate of 1.5% per year compound interest.

Calculate how much interest she will receive after the 7 years.
Give your answer correct to the nearest dollar.

Answer \$ ..... [4]

17

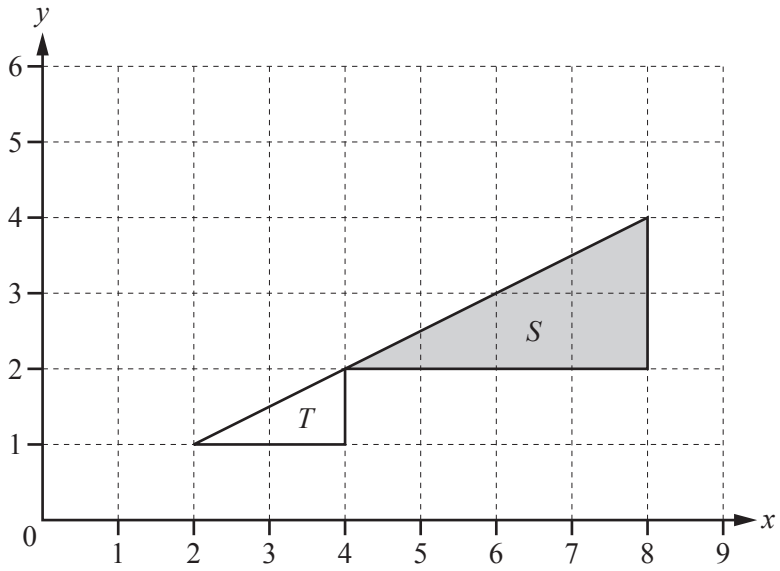

(a) Describe fully the **single** transformation that maps triangle *S* onto triangle *T*.

Answer(a) .....

..... [3]

(b) Find the matrix which represents the transformation that maps triangle *S* onto triangle *T*.

Answer(b) $\begin{pmatrix} \quad & \quad \\ \quad & \quad \end{pmatrix}$ [2]

---

18 **(a)** Work out $\begin{pmatrix} 1 & -2 \\ 3 & 4 \end{pmatrix}\begin{pmatrix} -5 & -3 \\ 2 & 1 \end{pmatrix}$.

Answer(a) $\begin{pmatrix} \quad & \quad \\ \quad & \quad \end{pmatrix}$ [2]

(b) Find the inverse of $\begin{pmatrix} 1 & -2 \\ 3 & 4 \end{pmatrix}$.

Answer(b) $\begin{pmatrix} \quad & \quad \\ \quad & \quad \end{pmatrix}$ [2]

(c) Explain why it is not possible to work out $\begin{pmatrix} 1 & -2 \\ 3 & 4 \end{pmatrix} + \begin{pmatrix} 3 \\ 2 \end{pmatrix}$.

Answer(c) ..... [1]

19

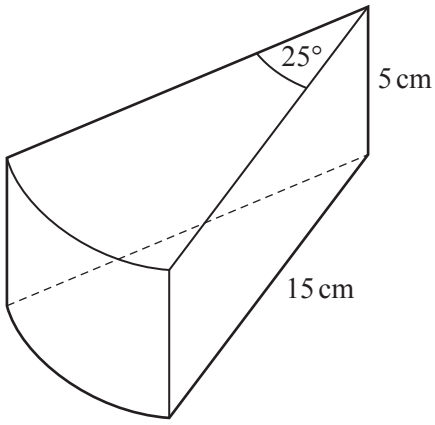

NOT TO SCALE

The diagram shows a wooden prism of height 5 cm.
The cross section of the prism is a sector of a circle with sector angle 25°.
The radius of the sector is 15 cm.

Calculate the **total** surface area of the prism.

Answer ..... cm^2 [5]

20 The table shows the probability that a person has blue, brown or green eyes.

Eye colour	Blue	Brown	Green
Probability	0.4	0.5	0.1

Use the table to work out the probability that two people, chosen at random,

(a) have blue eyes,

Answer(a) ..... [2]

(b) have different coloured eyes.

Answer(b) ..... [4]

21 $f(x) = x^3$ $g(x) = 3x - 5$ $h(x) = 2x + 1$

Work out

(a) ff(2),

Answer(a) ..... [2]

(b) gh(x) and simplify your answer,

Answer(b) ..... [2]

(c) $h^{-1}(x)$, the inverse of h(x).

Answer(c) $h^{-1}(x) =$ ..... [2]

BLANK PAGE