Please check the examination details below before entering your candidate information

Candidate surname	Other names

Pearson Edexcel Level 3 GCE

Centre Number | Candidate Number

Wednesday 17 June 2020

Afternoon (Time: 1 hour 30 minutes) | Paper Reference **9FM0/3D**

Further Mathematics

Advanced

Paper 3D: Decision Mathematics 1

Shadow Set 1

Answer book

Do not return the question paper with the answer book.

Total Marks

1.

	A	B	C	D	E	F	G
A	–	11	17	21	–	–	20
B	11	–	22	19	–	–	–
C	17	22	–	30	–	–	25
D	21	19	30	–	23	12	–
E	–	–	–	23	–	37	–
F	–	–	–	12	37	–	30
G	20	–	25	–	–	30	–

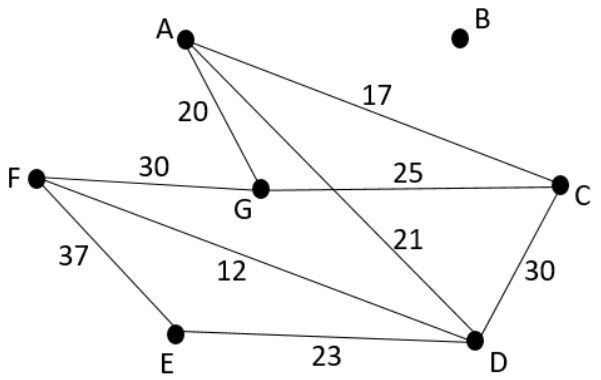

Diagram 1

© Pearson Education Ltd.

Question 1 continued

(Total for Question 1 is 6 marks)

© Pearson Education Ltd.

2. (a)

Activity	Immediately preceding activities
A	
B	
C	
D	

Activity	Immediately preceding activities
E	
F	
G	
H	

Activity	Immediately preceding activities
J	
K	
L	

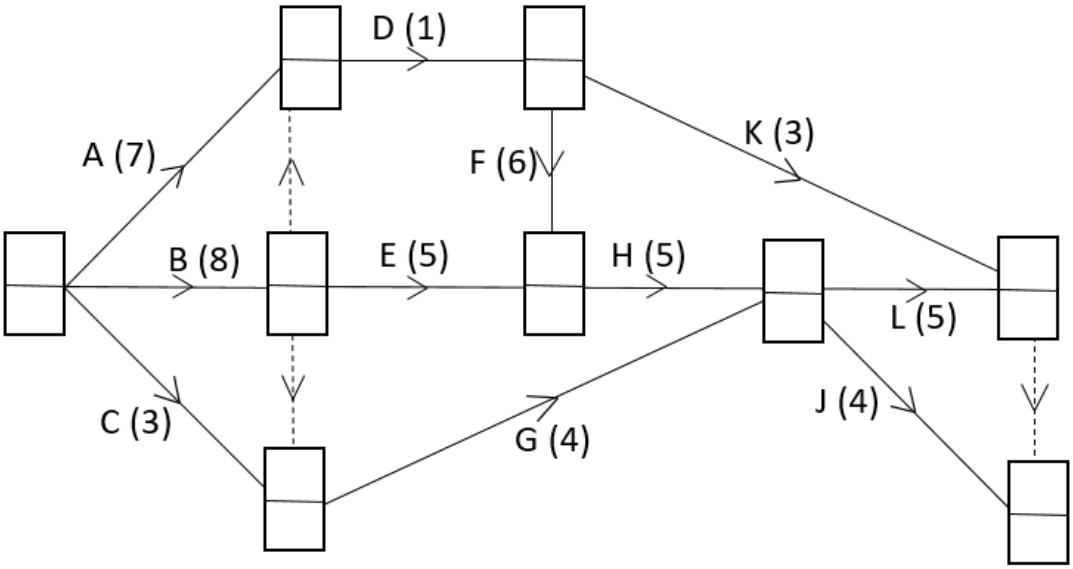

Diagram 1

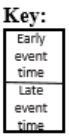

© Pearson Education Ltd.

Question 2 continued

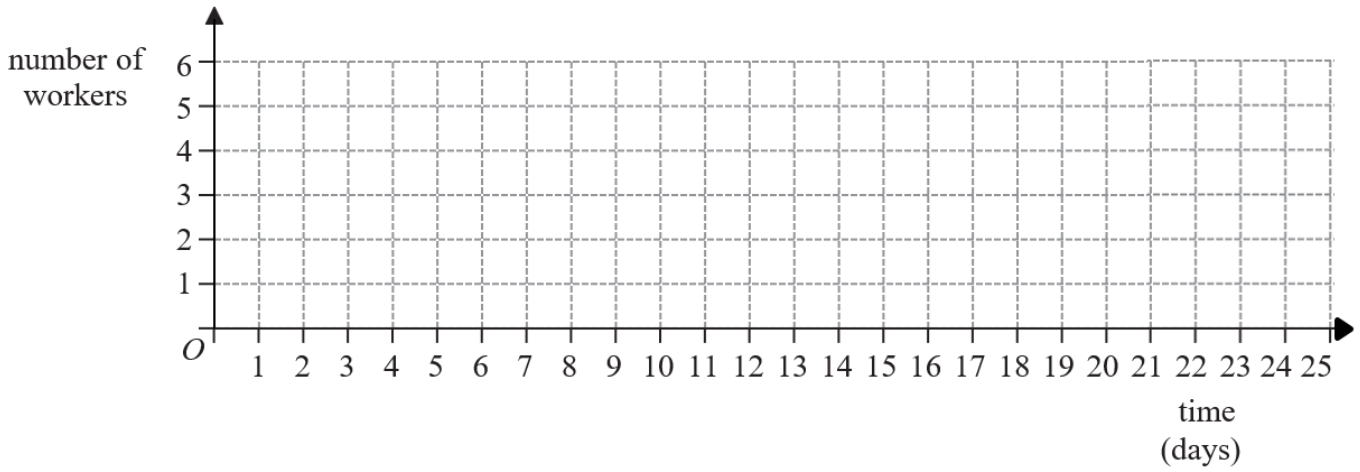

Grid 1

(Total for Question 2 is 15 marks)

© Pearson Education Ltd.

3. (a)

Initial distance matrix

	A	B	C	D	E
A					
B					
C					
D					
E					

Initial route matrix

	A	B	C	D	E
A					
B					
C					
D					
E					

(b)

Distance matrix

	A	B	C	D	E
A					
B					
C					
D					
E					

Route matrix

	A	B	C	D	E
A					
B					
C					
D					
E					

Distance matrix

	A	B	C	D	E
A					
B					
C					
D					
E					

Route matrix

	A	B	C	D	E
A					
B					
C					
D					
E					

If you make an error there are spare copies of these matrices on Page 9.

© Pearson Education Ltd.

Question 3 continued

© Pearson Education Ltd.

Question 3 continued

© Pearson Education Ltd.

Question 3 continued

Only use these matrices if you have made an error in your working.

(a)

Spare copy of initial distance matrix

	A	B	C	D	E
A					
B					
C					
D					
E					

Spare copy of initial route matrix

	A	B	C	D	E
A					
B					
C					
D					
E					

(b)

Spare copy of distance matrix

	A	B	C	D	E
A					
B					
C					
D					
E					

Spare copy of route matrix

	A	B	C	D	E
A					
B					
C					
D					
E					

Spare copy of distance matrix

	A	B	C	D	E
A					
B					
C					
D					
E					

Spare copy of route matrix

	A	B	C	D	E
A					
B					
C					
D					
E					

(Total for Question 3 is 9 marks)

© Pearson Education Ltd.

4.

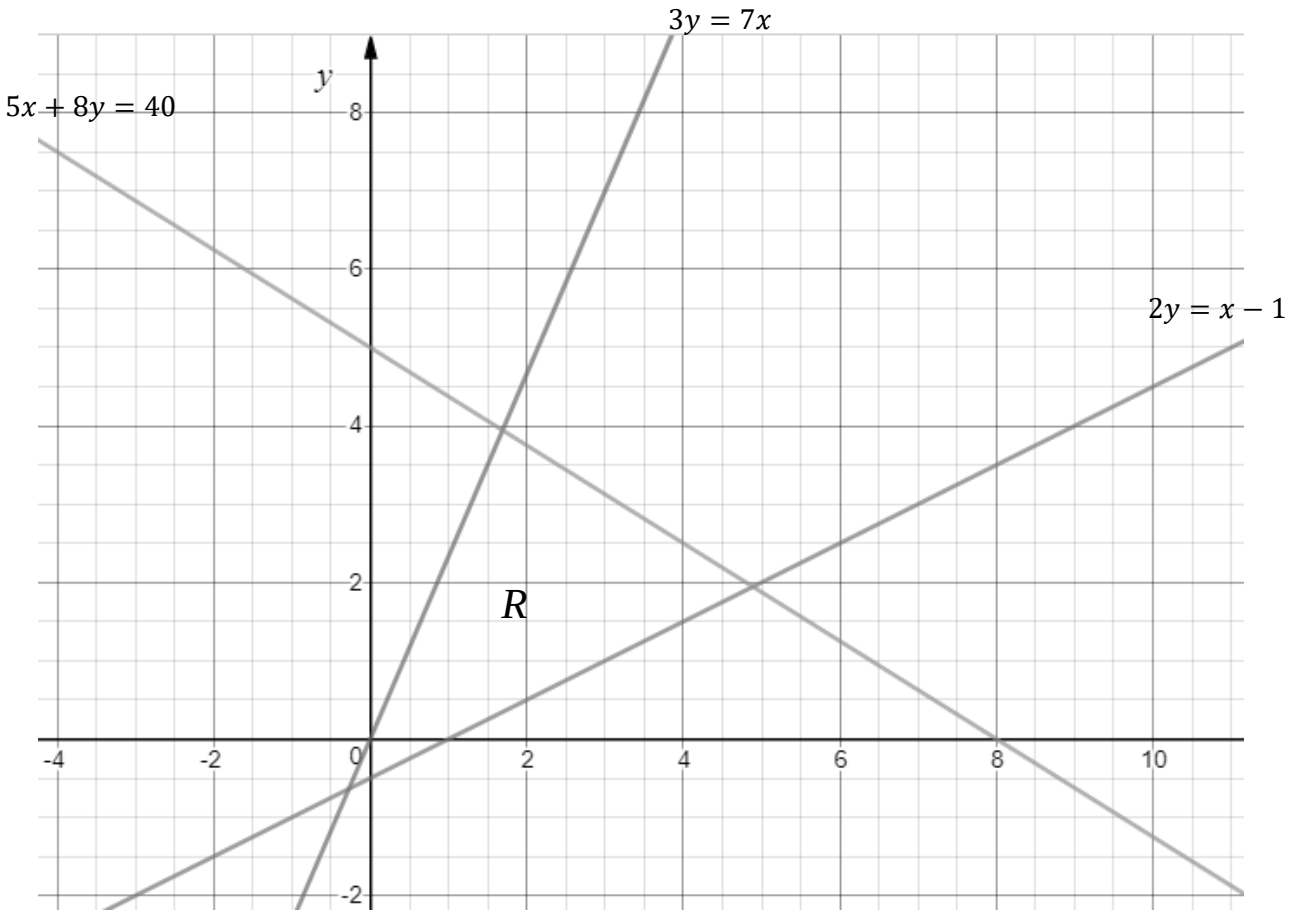

© Pearson Education Ltd.

Question 4 continued

© Pearson Education Ltd.

Question 4 continued

© Pearson Education Ltd.

Question 4 continued

(Total for Question 4 is 10 marks)

© Pearson Education Ltd.

5. 11 22 21 x 5 9 14 20 3

© Pearson Education Ltd.

Question 5 continued

(Total for Question 5 is 7 marks)

© Pearson Education Ltd.

6. (a)

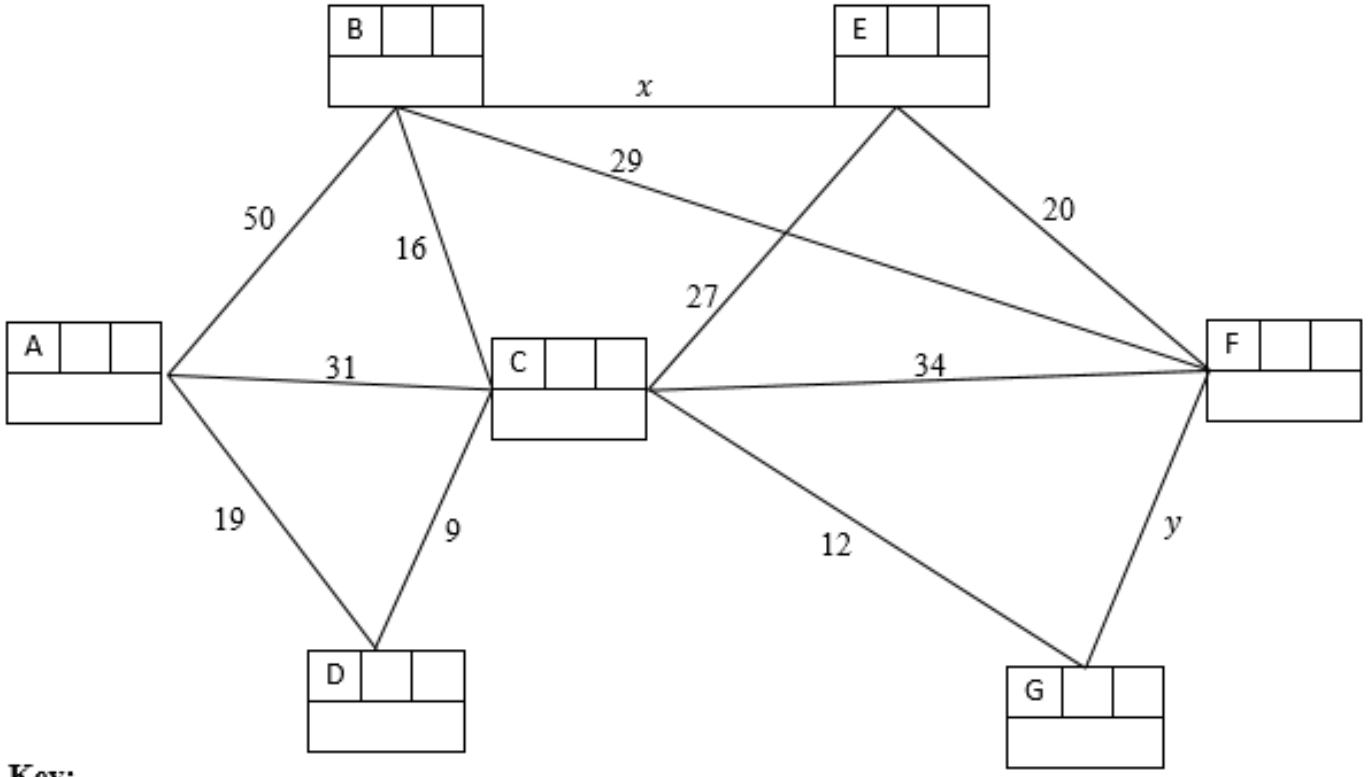

Key:

Vertex	Order of labelling	Final value
Working values		

Question 6 continued

(Total for Question 6 is 11 marks)

© Pearson Education Ltd.

7.

Basic variable	x	y	z	s_1	s_2	s_3	a_1	a_2	Value
s_1	1	1	1	1	0	0	0	0	40
a_1	2	1	-1	0	–1	0	1	0	10
a_2	0	-1	1	0	0	–1	0	1	10
P	–2	-3	-1	0	0	0	0	0	0
A									

Table 1

© Pearson Education Ltd.

Question 7 continued

b.v.	x	y	z	s_1	s_2	s_3	Value
s_1	0	2	0	1	$\frac{1}{2}$	$\frac{3}{2}$	20
x	1	0	0	0	$-\frac{1}{2}$	$-\frac{1}{2}$	10
z	0	-1	1	0	0	–1	10
P	0	-4	0	0	-1	-2	30

b.v.	x	y	z	s_1	s_2	s_3	Value	Row Ops
P								

Spare copy

b.v.	x	y	z	s_1	s_2	s_3	Value	Row Ops
P								

© Pearson Education Ltd.

Question 7 continued

(Total for Question 7 is 17 marks)

TOTAL FOR PAPER IS 75 MARKS

© Pearson Education Ltd.